13.Extension Case

A: REMOVAL

1) Remove the manual transmission assembly from the vehicle. <Ref. to 6MT-34, REMOVAL, Manual Transmission Assembly.>
2) Prepare the transmission for overhaul. <Ref. to 6MT-39, Preparation for Overhaul.>
3) Remove the extension case.

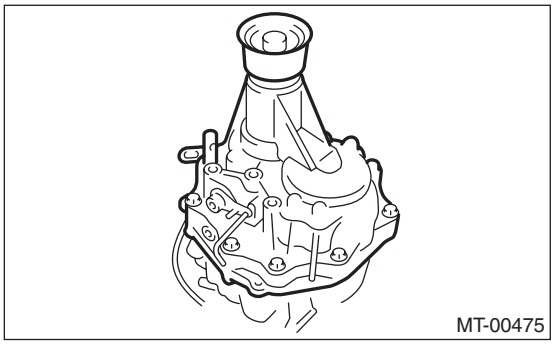

4) Remove any remaining liquid gasket from the extension case and transmission case.

B: INSTALLATION

1) Select the thrust washer of the transfer driven gear, and attach to the extension case. <Ref. to 6MT-46, ADJUSTMENT, Extension Case.>
2) Apply a thin coat of oil to the outer surface of the bearing cone, and attach to the extension case.
3) Select the thrust washer of the transfer drive gear, and attach to the center differential.
4) Apply liquid gasket to the transmission case.

Liquid gasket:
THREE BOND 1215 (Part No. 004403007)

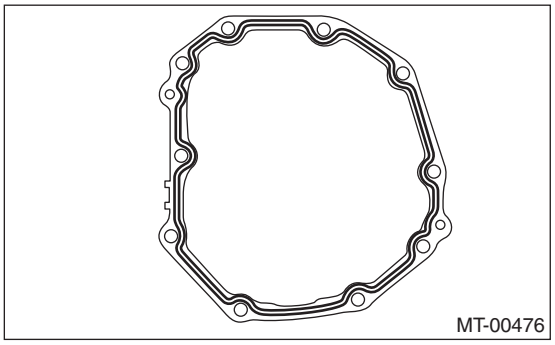

5) Install the extension case.

Tightening torque:
48 N·m (4.9 kgf-m, 35.4 ft-lb)

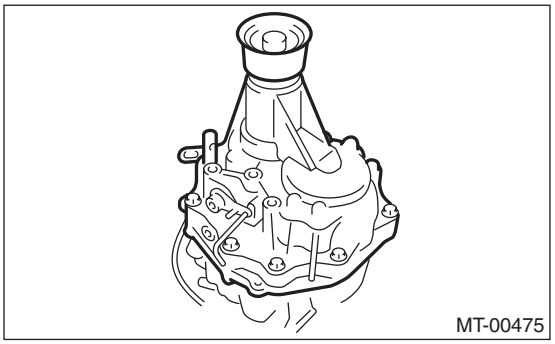

NOTE:
Insert the stopper section of the center differential between the extension guides.

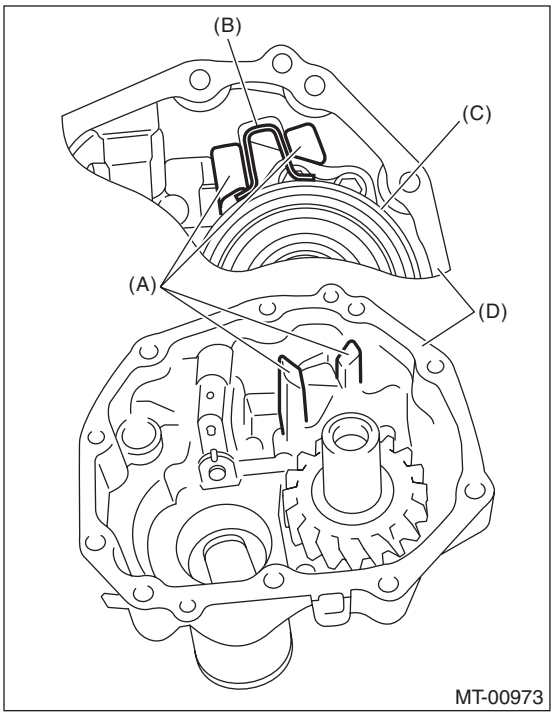

(A) Extension guide
(B) Stopper
(C) Center differential
(D) Extension case

6) Install the manual transmission assembly to the vehicle. <Ref. to 6MT-36, INSTALLATION, Manual Transmission Assembly.>

C: DISASSEMBLY

1) Remove the transfer drive gear. <Ref. to 6MT-54, REMOVAL, Transfer Drive Gear.>
2) Remove the extension guide.

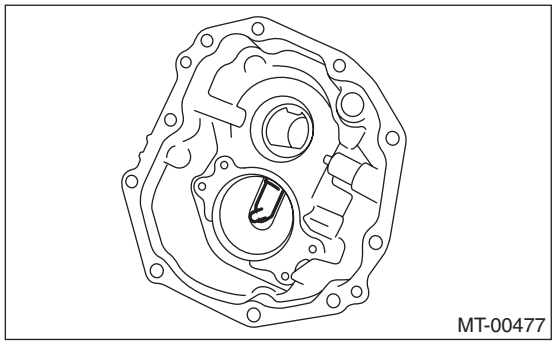

3) Remove the shift bracket.

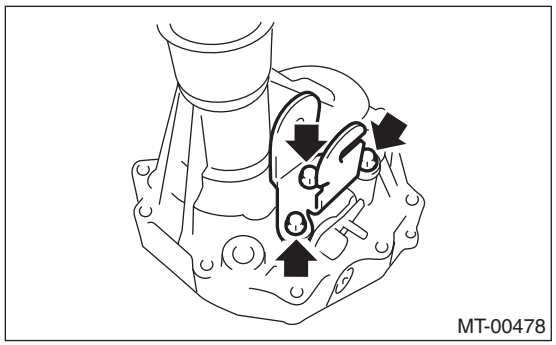

4) Remove the bearing cone using the ST.
ST 18758AA000 PULLER

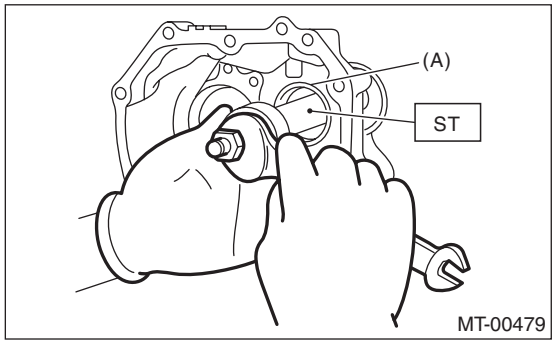

(A) Bearing cone

5) Remove the thrust washer and oil plate.

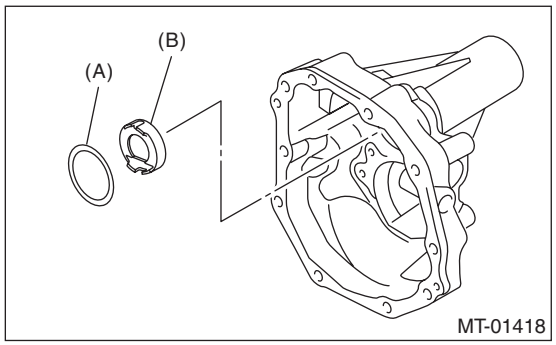

(A) Thrust washer
(B) Oil plate

6) Remove the shifter arm oil seal.

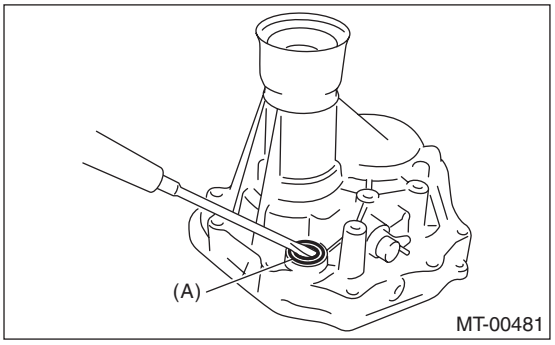

(A) Oil seal

7) Remove the reverse check system. <Ref. to 6MT-51, REMOVAL, Reverse Check System.>
8) Remove the extension oil seal. <Ref. to 6MT-29, REPLACEMENT, Oil Seal.>

D: ASSEMBLY

1) Install the reverse check system. <Ref. to 6MT-52, INSTALLATION, Reverse Check System.>
2) Install the extension case oil seal. <Ref. to 6MT-29, REPLACEMENT, Oil Seal.>
3) Install a shifter arm oil seal using the ST.
ST1 18657AA000 INSTALLER
ST2 18671AA000 OIL SEAL GUIDE

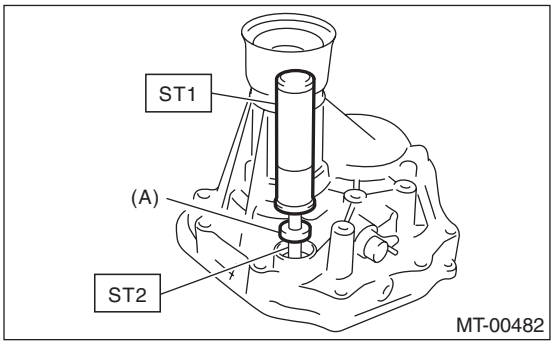

(A) Oil seal

4) Install the oil plate.

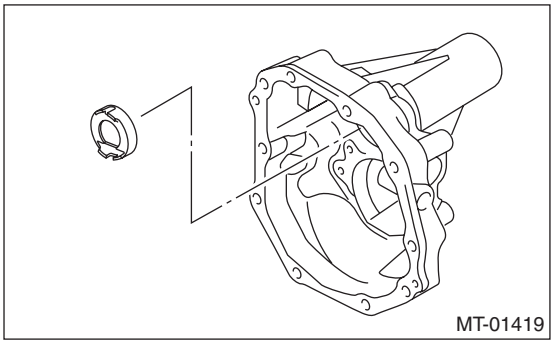

5) Select the thrust washer of the bearing, and attach to the extension case. <Ref. to 6MT-46, ADJUSTMENT, Extension Case.>

6) Apply a thin coat of oil to the outer surface of the bearing cone, and attach to the extension case.
7) Install the shift bracket.

Tightening torque:
25 N·m (2.5 kgf-m, 18.1 ft-lb)

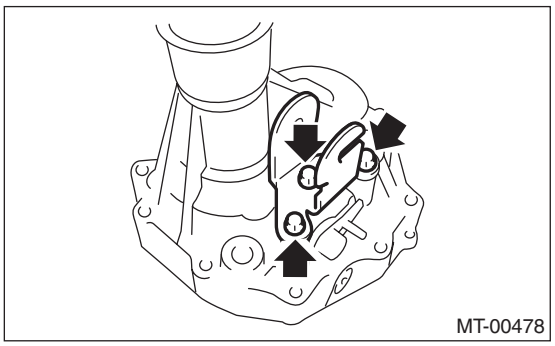

8) Attach the extension guide and the transfer driven gear. <Ref. to 6MT-54, INSTALLATION, Transfer Drive Gear.>

E: INSPECTION

1) Check to make sure there is no damage or cracks on the extension case. If damage or cracking is found, replace the extension case.
2) Inspect for oil leaks at the extension case and transmission case oil seals and mating surfaces. If there are oil leaks, replace the oil seal and liquid gasket.

F: ADJUSTMENT

1. TRANSFER DRIVEN GEAR BEARING THRUST WASHER ADJUSTMENT

1) Remove the bearing cone from the extension case using the ST.
ST 18758AA000 PULLER

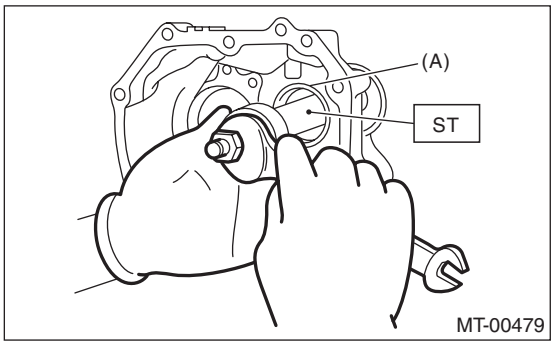

(A) Bearing cone

2) Remove the thrust washer.

3) Measure depth “Z” between the extension case end area and bearing cone contact area.
ST 499575500 GAUGE

NOTE:
When measuring depth “Z”, subtract the thickness of the ST [15 mm (0.59 in)] from the measured value.

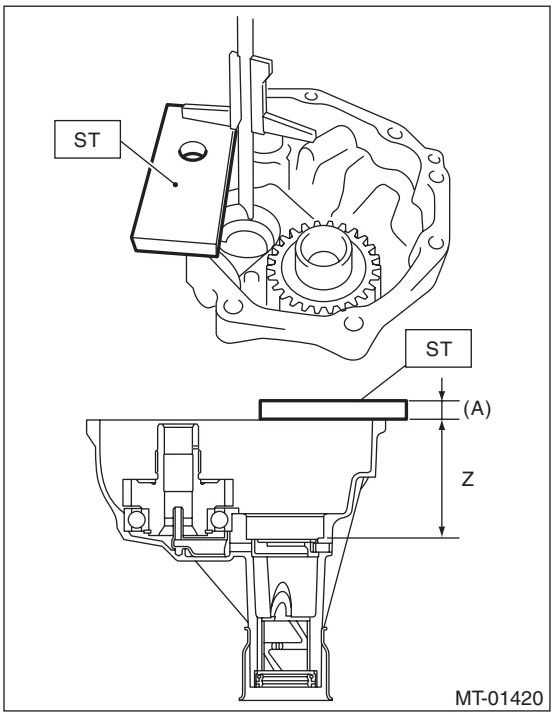

(A) 15 mm (0.59 in)

4) Remove the transfer driven gear. <Ref. to 6MT-56, REMOVAL, Transfer Driven Gear.>
5) Remove the center differential. <Ref. to 6MT-58, REMOVAL, Center Differential.>
6) Remove the snap ring and flat washer from the selector arm area.

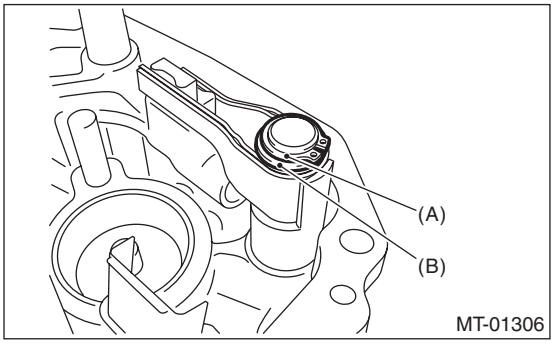

(A) Snap ring
(B) Flat washer

7) Using an ST, remove the neutral set spring and support.
ST1 18756AA000 CLAW
ST2 399893600 PLIER

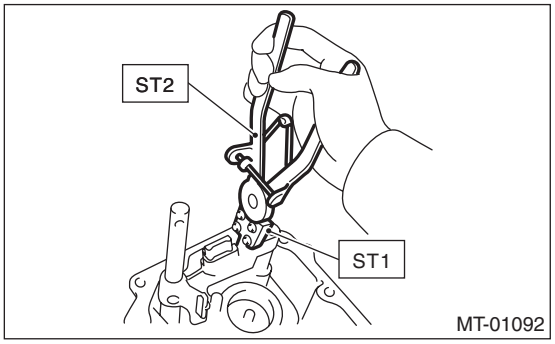

8) Lift the striking rod, and remove the spring pin.

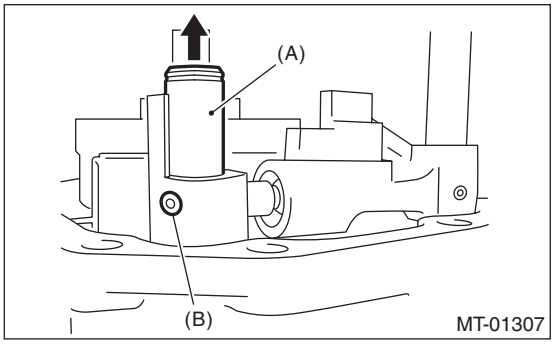

(A) Striking rod
(B) Spring pin

9) Remove the selector arm No. 2 and the shifter arm. (Transmission serial No. 144576 or earlier)

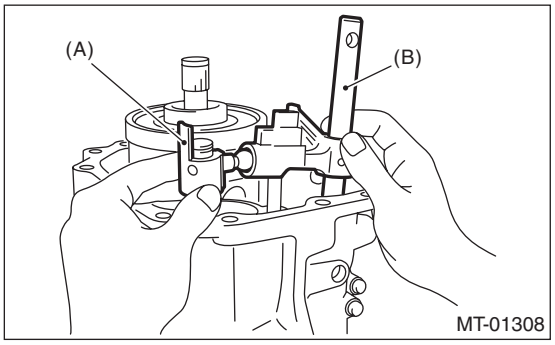

(A) Selector arm No. 2
(B) Shifter arm

10) Remove the selector arm No. 2, shifter arm, selector plunger and spring. (Transmission serial No. 144577 or later)

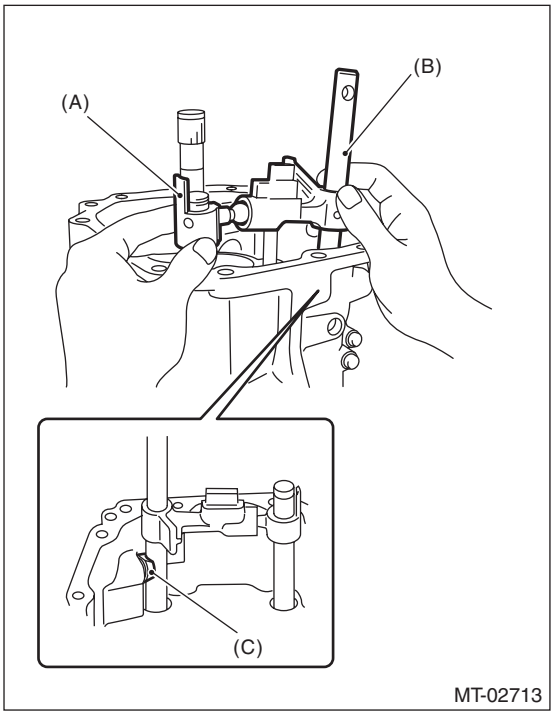

(A) Selector arm No. 2
(B) Shifter arm
(C) Selector plunger

11) Attach the bearing cone to the transfer driven gear.
12) Set the ST.
ST 18831AA000 GAUGE

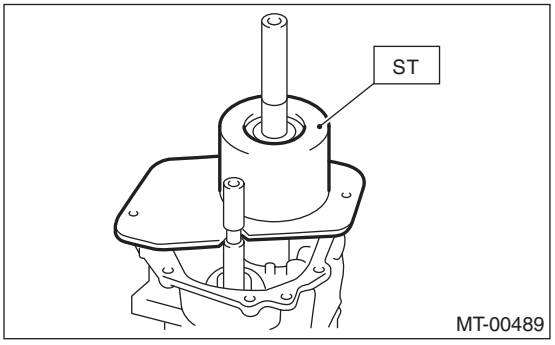

13) Turn the transfer driven gear 10 or more times to seat the bearing properly.

14) Measure depth “Y” between the end of the ST and the bearing cone.
ST 18831AA000 GAUGE

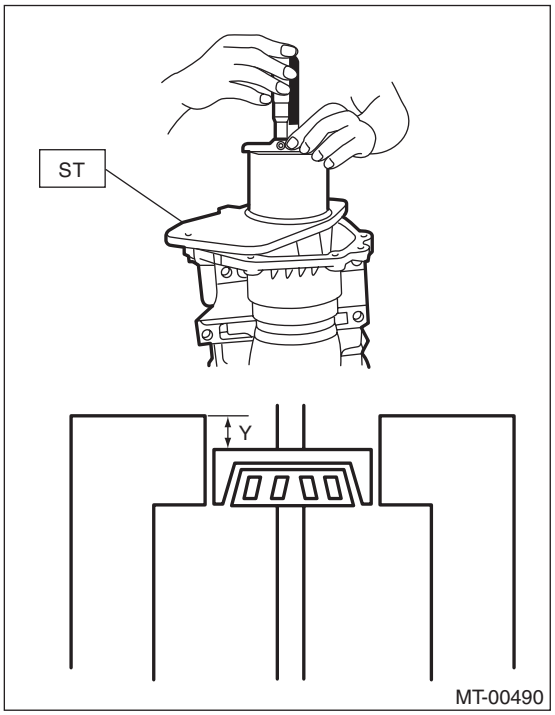

15) Using the following calculation, calculate the transfer driven gear bearing thrust washer value t.
t = Z – (100 – Y) – {0.02 — 0.11 mm (0.0008 — 0.0043 in)}

t mm (in)	Transfer driven gear bearing thrust washer thickness
Y mm (in)	Depth between the end of the ST and the bearing cone.
Z mm (in)	Depth between the end of the extension case and the bearing cone contact area.
0.02 — 0.11 mm (0.0008 — 0.0043 in)	Standard clearance between the thrust washer and taper roller bearing
100 mm (3.94 in)	Height of ST

16) Refer to the calculated value t to select the closest thrust washer from the following table.

Standard clearance between the thrust washer and taper roller bearing
0.02 — 0.11 mm (0.0008 — 0.0043 in)

NOTE:
Match to be within the standard clearance range.

Thrust washer (50 × 61 × t)	
Part No.	Thickness mm (in)
803050060	0.50 (0.0197)
803050061	0.55 (0.0217)
803050062	0.60 (0.0236)
803050063	0.65 (0.0256)
803050064	0.70 (0.0276)
803050065	0.75 (0.0295)
803050066	0.80 (0.0315)
803050067	0.85 (0.0335)
803050068	0.90 (0.0354)
803050069	0.95 (0.0374)
803050070	1.00 (0.0394)
803050071	1.05 (0.0413)
803050072	1.10 (0.0433)
803050073	1.15 (0.0453)
803050074	1.20 (0.0472)
803050075	1.25 (0.0492)
803050076	1.30 (0.0512)
803050077	1.35 (0.0531)
803050078	1.40 (0.0551)
803050079	1.45 (0.0571)

17) Install the selector arm No. 2 and the shifter arm. (Transmission serial No. 144576 or earlier)

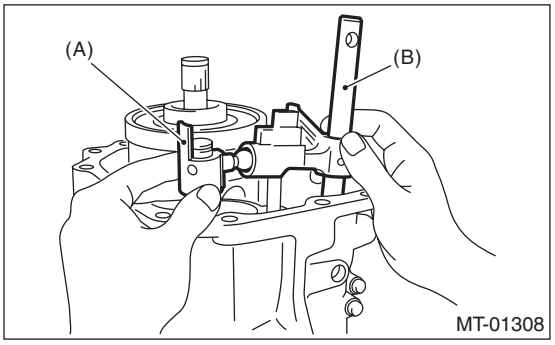

(A) Selector arm No. 2
(B) Shifter arm

18) Install the selector arm No. 2, shifter arm, selector plunger and spring. (Transmission serial No. 144577 or later)

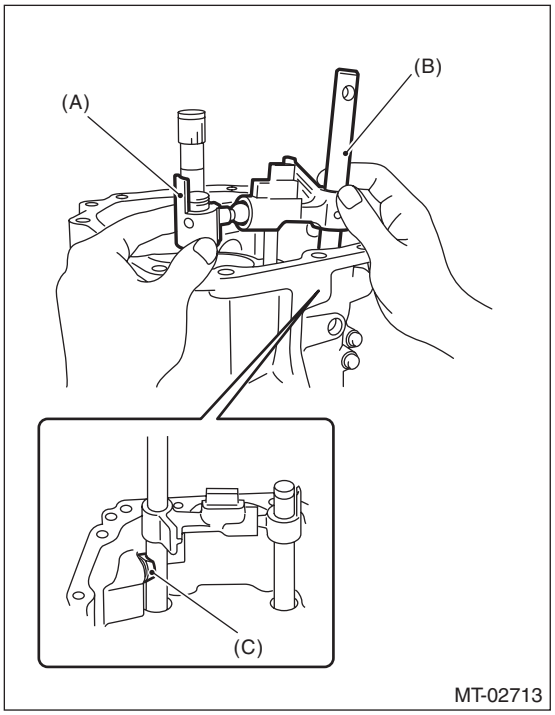

(A) Selector arm No. 2
(B) Shifter arm
(C) Selector plunger

19) Install a new spring pin.
20) Using the ST, install the neutral set spring and support.
ST1 18756AA000 CLAW
ST2 399893600 PLIER

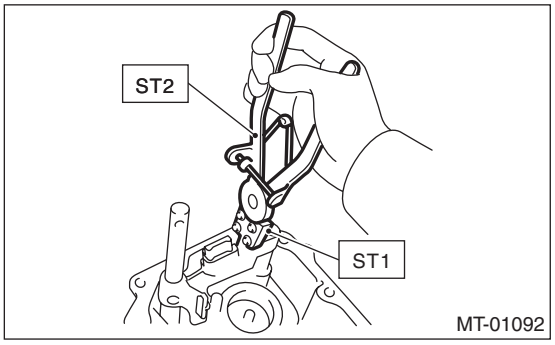

21) Install the flat washer and snap ring.
22) Install the center differential.

2. TRANSFER DRIVE GEAR THRUST WASHER SELECTION

1) Measure height “Z” between the transmission case end area and ST.
ST 499575500 GAUGE

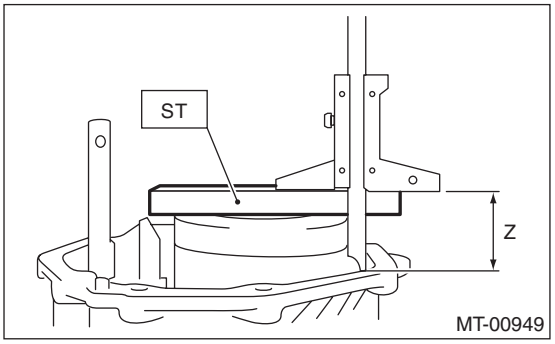

2) Measure depth “Y” between the end of the ST and the transfer drive gear.
ST 499575500 GAUGE

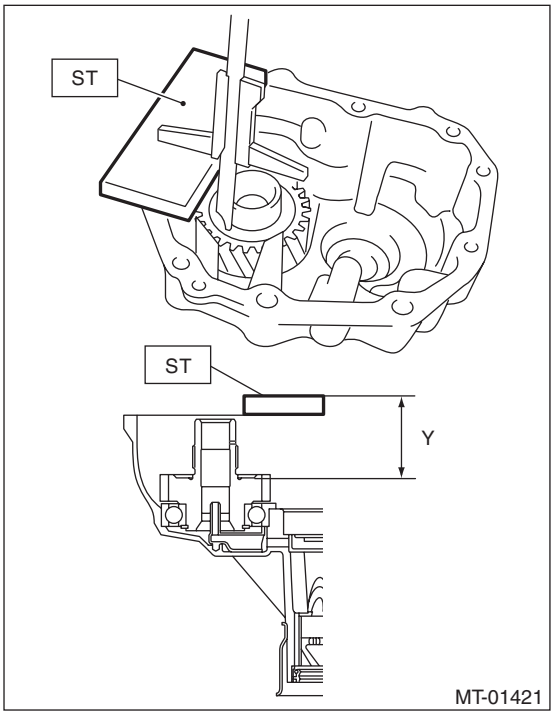

3) Using the following calculation, calculate the transfer drive gear thrust washer value t.
t = {Y – 15 mm (1.18 in)} – {Z – 15 mm (1.18 in)} – 0.75 — 0.95 mm (0.030 — 0.037 in)

t mm (in)	Transfer drive gear thrust washer thickness
Y mm (in)	Depth between the end of the ST and the transfer drive gear
Z mm (in)	Height from the end of the transmission case to the end of the ST.
0.75 — 0.95 mm (0.030 — 0.037 in)	Standard clearance between the thrust washer and transfer drive gear
15 mm (1.18 in)	Thickness of ST

4) Refer to the calculated value “t” to select the closest thrust washer from the following table.

Standard clearance between the thrust washer and transfer drive gear
0.75 — 0.95 mm (0.030 — 0.037 in)

Thrust washer (36.3 × 52 × t)	
Part No.	Thickness mm (in)
803036070	0.80 (0.0315)
803036071	0.95 (0.0374)
803036072	1.10 (0.0433)
803036073	1.25 (0.0492)
803036074	1.40 (0.0551)
803036075	0.65 (0.0256)

5) Install the selected thrust washer.